1. Color-gloss sensor SPECTRO-3-50-FCL-30°/30°
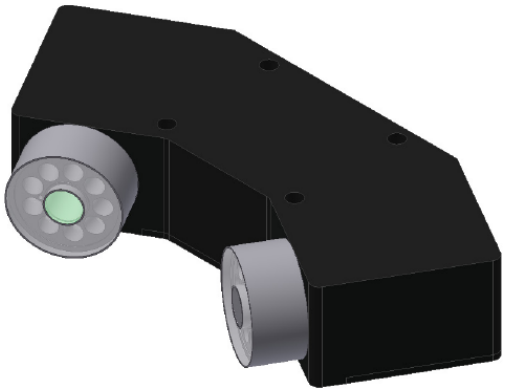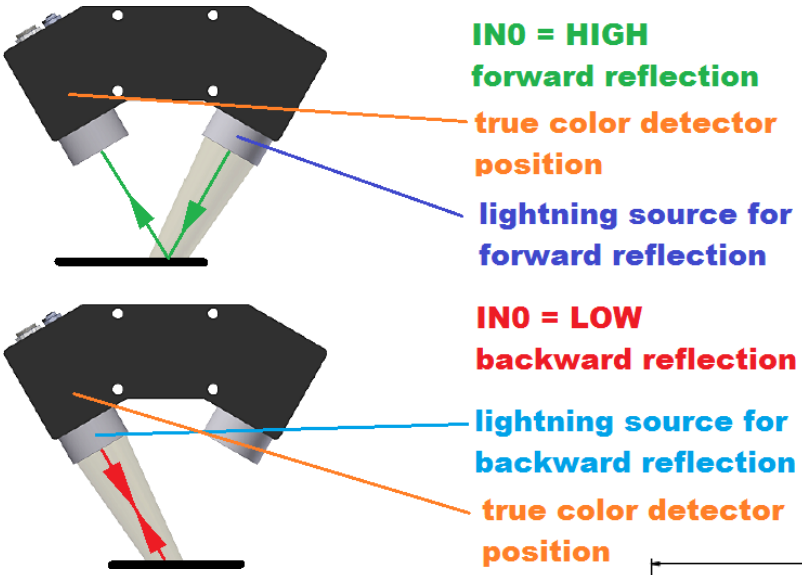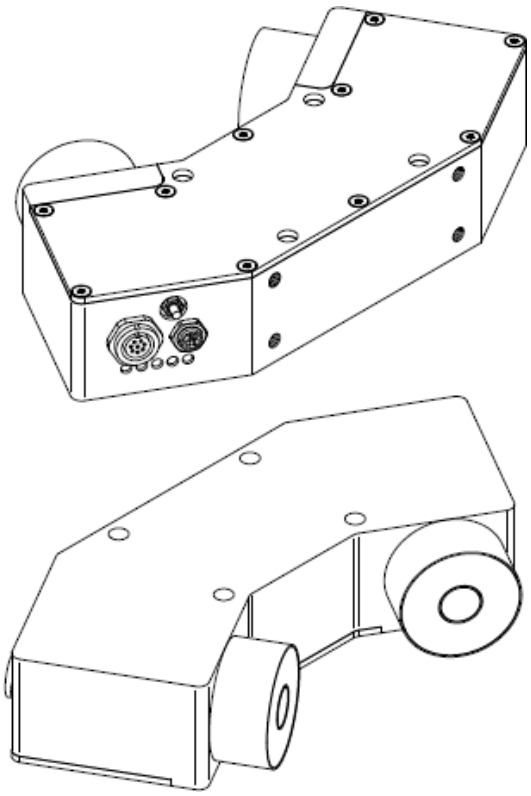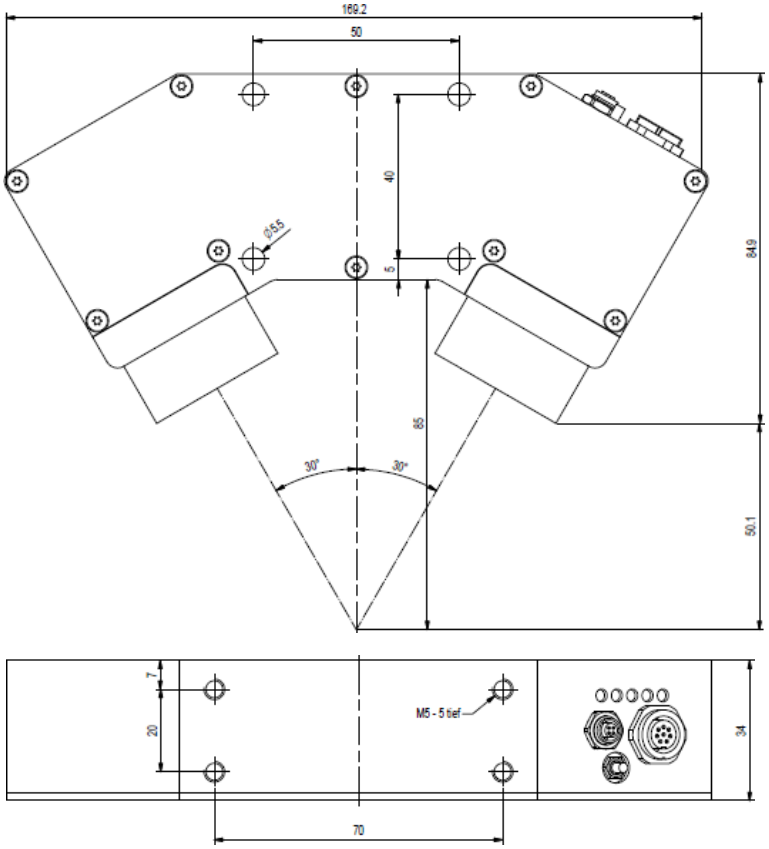
The color-gloss sensor type **SPECTRO-3-50-FCL-30°/30°** comes with two lightning sources which will be used alternately dependent of the IN0-signal level. The sensor is used for objects with very small color as well as gloss differences, e.g. leather imitations, leather and plastic components for the automotive interior field but also for differentiation of plastic films and plastic laminations for the furniture industry.